BS – Biochemistry with a minor in biology (PRE-DENT) (SC-BS/BCHM/BIO/PDBC) 2019 Catalog year: College of Science and Engineering

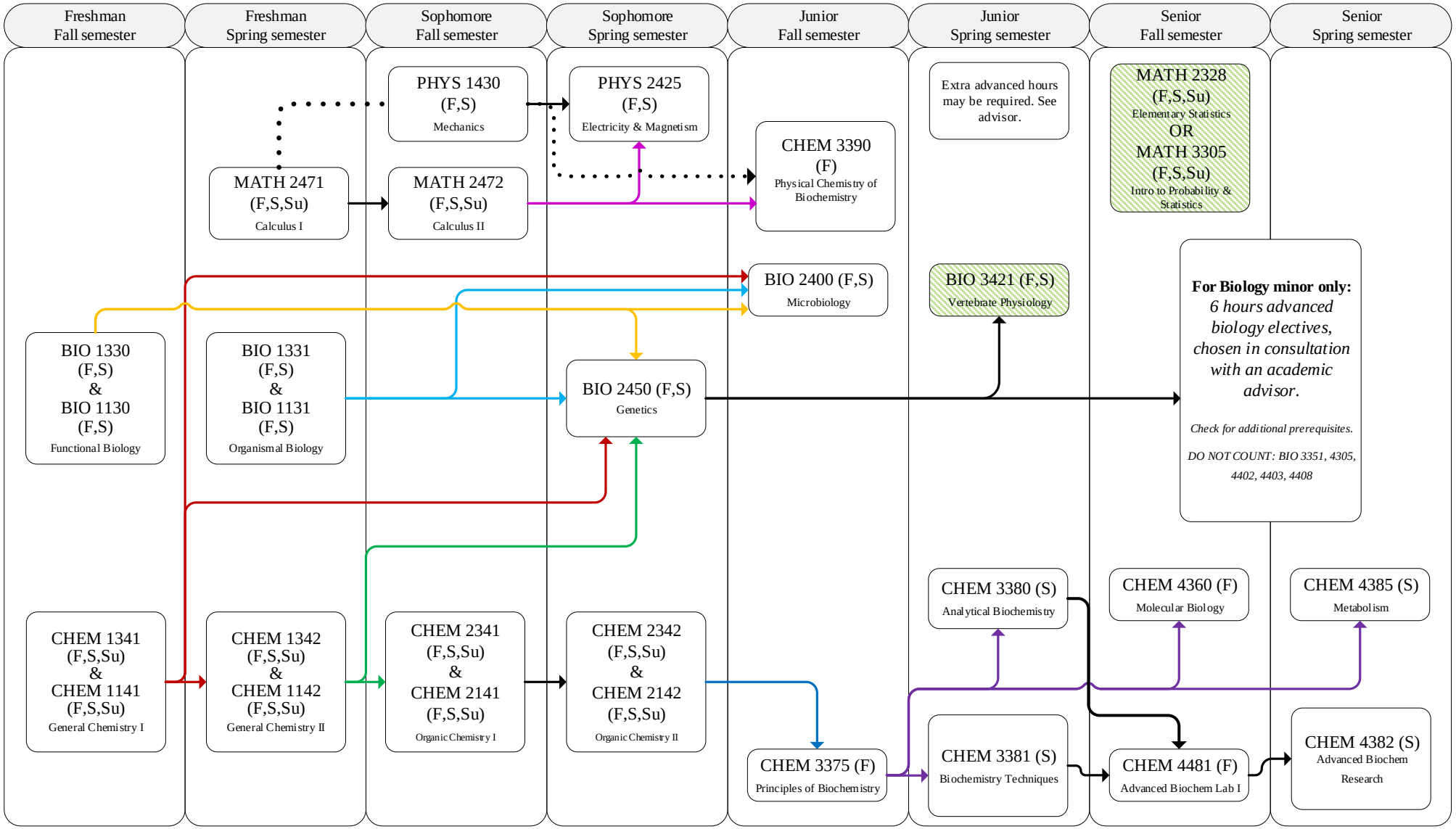

This is not an official degree audit and it is subject to change. This chart is intended to be used by students who start out at Texas State. Please contact the College of Science Undergraduate Advising Center for advising.

Note: In addition to major courses, students must also complete all core and minor requirements (if applicable) and any other requirements for graduation.

KEY:
Arrows indicate prerequisites.
Arrows with dotted lines indicate co-requisites.
Arrows with dash lines are recommended prerequisites.
Courses taught specific semesters are indicated with the following codes:
F-Fall Su-Summer Session I or II
S-Spring

Required WI courses: CHEM 3381, 4481, 4382

Core courses must be completed:

___US 1100
___ENG 1310
___HIST 1310
___POSI 2310
___PSY 1300
___COMM 1310
___ENG 1320
___HIST 1320
___POSI 2320
___PHIL 1320
___ENG 2310-2360
___ART/DAN/MU/TH 2313

US 1100 & ENG 1310 recommended for first semester. HIST 1310/1320 not recommended for first semester.