BS – Biochemistry with and without concentrations and a minor in biology (SC-BS/BCHM/BIO) 2022 Catalog year: College of Science and Engineering

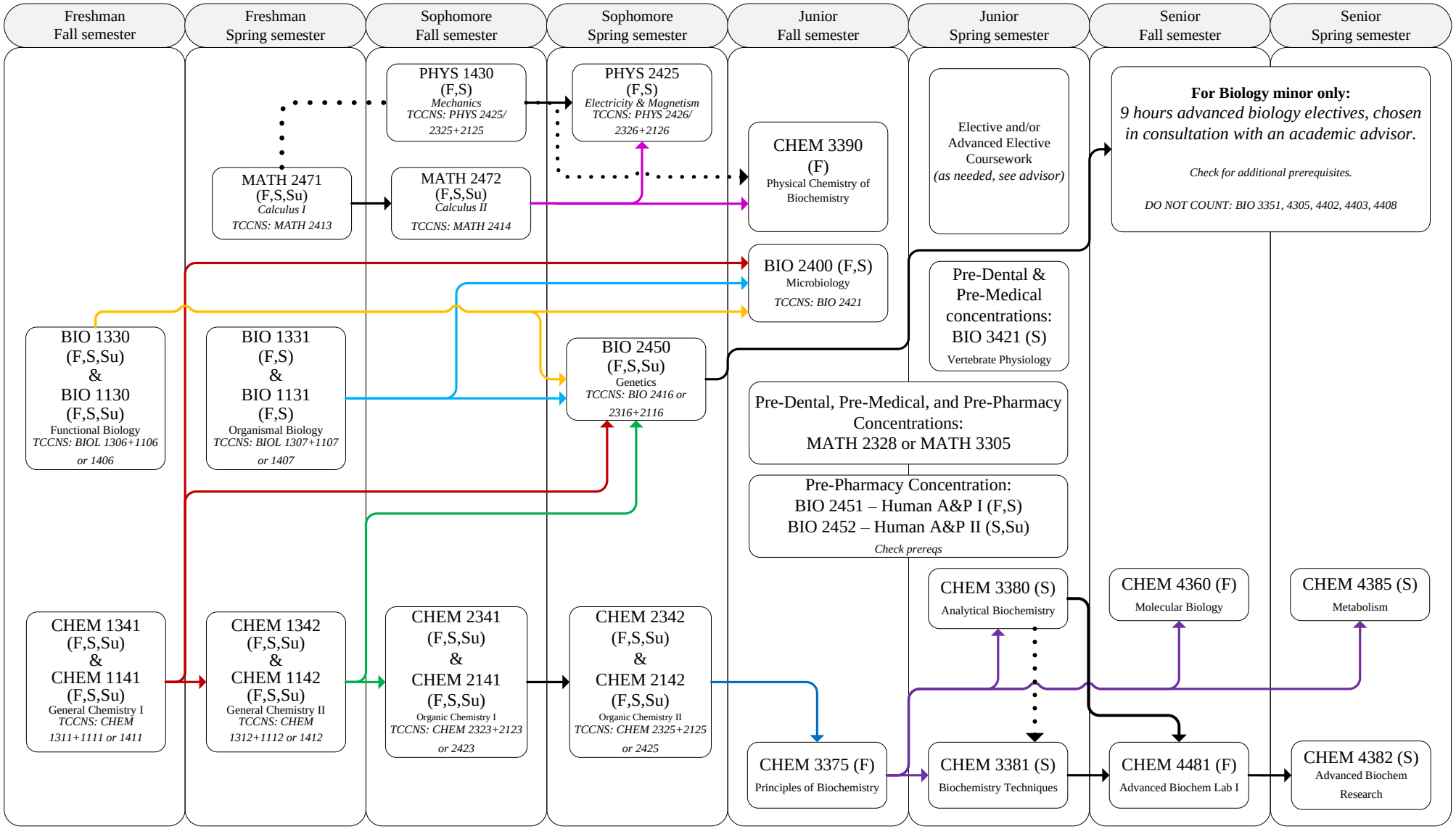

This is not an official degree audit and it is subject to change. This chart is intended to be used by students who start out at Texas State. Please contact the College of Science Undergraduate Advising Center for advising.

Note: In addition to major courses, students must also complete all core and minor requirements (if applicable) and any other requirements for graduation.

KEY:
Arrows indicate prerequisites.
Arrows with dotted lines indicate co-requisites.
Arrows with dash lines are recommended prerequisites.
Courses taught specific semesters are indicated with the following codes:
F-Fall Su-Summer Session I or II
S-Spring

Required WI courses: CHEM 3381, 4481, 4382

Core courses must be completed:

___ 6 credits Core 010	TXST options: ENG 1310, ENG 1320, ENG 1321, COMM 1310
___ 3 credits Core 020	BCHM required course: MATH 2471
___ 6 credits Core 030	BCHM required course: BIO 1330/1130 + BIO 1331/1131
___ 3 credits Core 040	See catalog for each pre-professional concentration
___ 3 credits Core 050	TXST options: ART 2313, DAN 2313, MU 2313, TH 2313
___ 6 credits Core 060	TXST options:[HIST 1310/2327/2381] and [HIST 1320/2328/2382]
___ 6 credits Core 070	TXST options: POSI 2310 & POSI 2320
___ 3 credits Core 080	See catalog for each pre-professional concentration
___ 6 credits Core 090, 091, 092, 093, and 094	BCHM required course: MATH 2472 & PHYS 2425

US 1100 may be required for some students. Consult with an advisor regarding course choices.